PULLEY ASSEMBLY

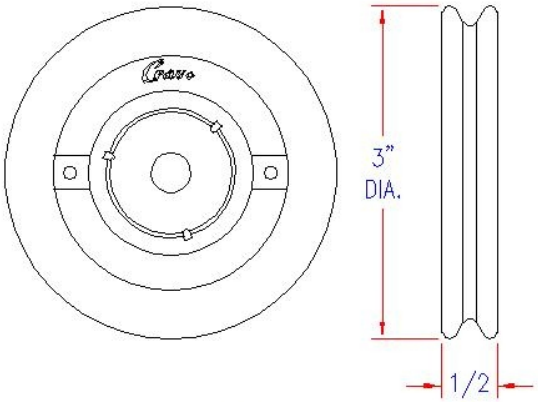

PART NO. 2522

10 mm BEARING

PART NO. 1110-1

BEARING INSERT

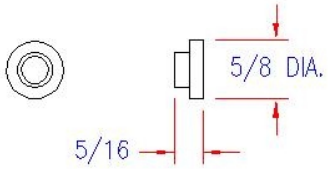

PART NO. 2523

TUBE CARRIER

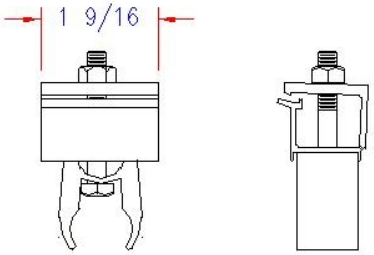

PART NO. 18041001

TUBE CARRIER WITH CABLE RETAINER

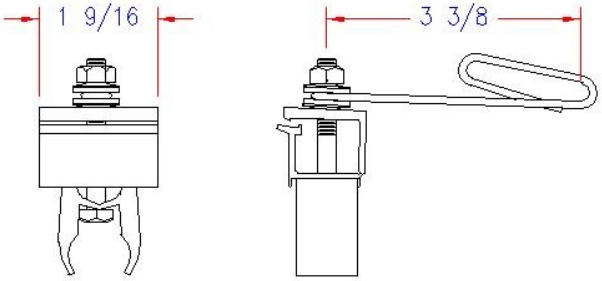

PART NO. 18041006

DELAY BRACKET ASSEMBLY

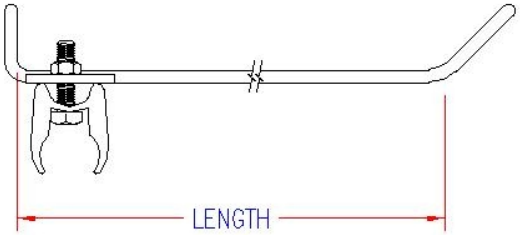

PART NO. 2358-06 (LENGTH = 6")
PART NO. 2358-12 (LENGTH = 12")
PART NO. 2358-18 (LENGTH = 18")
PART NO. 2358-24 (LENGTH = 24")

CRAVO EQUIPMENT LTD. BRANTFORD, ONTARIO, CANADA	SECTION: DRIVE SYSTEM	DATE: SEPT 24/04	DWG. NO. PM-0001	PAGE NO. 1

DELAY ASSEMBLY – "A" FRAME ONLY

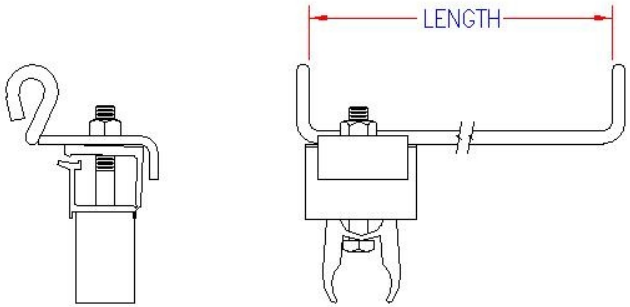

PART NO. 18041013-02 (LENGTH = 2")
PART NO. 18041013-06 (LENGTH = 6")
PART NO. 18041013-12 (LENGTH = 12")
PART NO. 18041013-18 (LENGTH = 18")

TENSION SPRING KIT – GABLE DRIVE

12" DELAY ASSEMBLY	PART NO. 18041013-12	QTY. 1
CABLE TENSION SPRING	PART NO. 18984105	QTY. 1
'P' CLIP	PART NO. 2859-1	QTY. 2
1/8" CABLE CLAMP	PART NO. 1118-1	QTY. 2
HEX NUT #10-24	PART NO. 96007001	QTY. 2

PART NO. 18980007

TENSION SPRING KIT – PARALLEL SPLIT

18" DELAY ASSEMBLY	PART NO. 18041013-18	QTY. 1
CABLE TENSION SPRING	PART NO. 18984105	QTY. 1
'P' CLIP	PART NO. 2859-1	QTY. 2
1/8" CABLE CLAMP	PART NO. 1118-1	QTY. 2
HEX NUT #10-24	PART NO. 96007001	QTY. 2

PART NO. 18980008

THREADED SHAFT
FOR RW243/245/405/605 GEARMOTORS
(PRE – 2001)

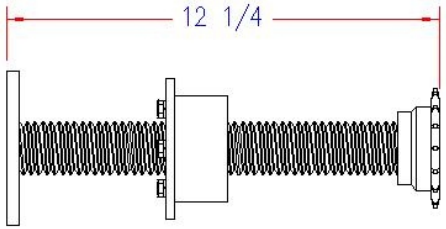

PART NO. 2484-4

THREADED SHAFT
FOR RW/245/405/605 GEARMOTORS

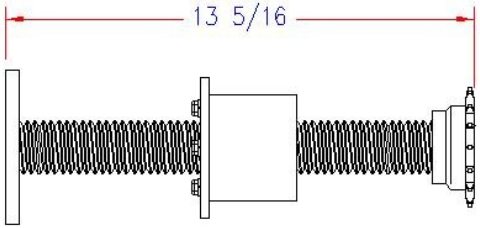

PART NO. 18042003-1

THREADED SHAFT
FOR RW1005

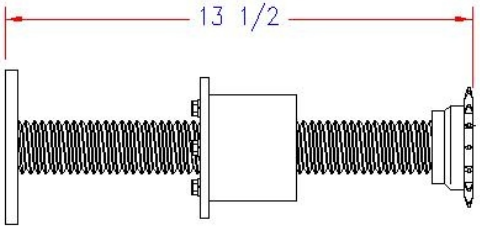

PART NO. 18042003-2